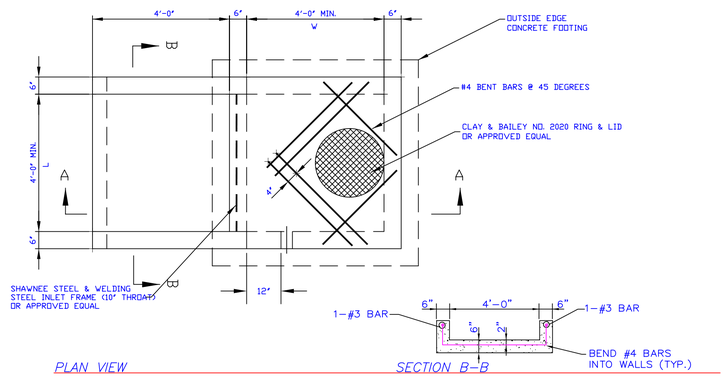

1 STANDARD PRECAST AREA INLET

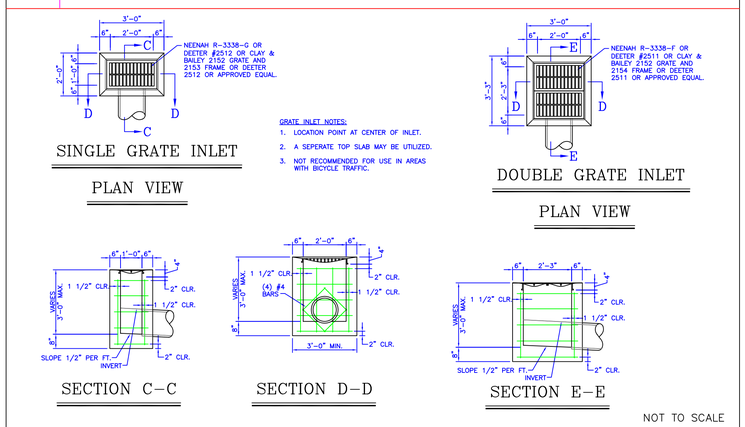

2 STANDARD GRATE INLETS

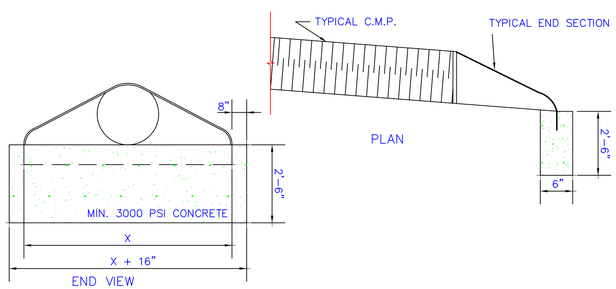

3 STANDARD END SECTION

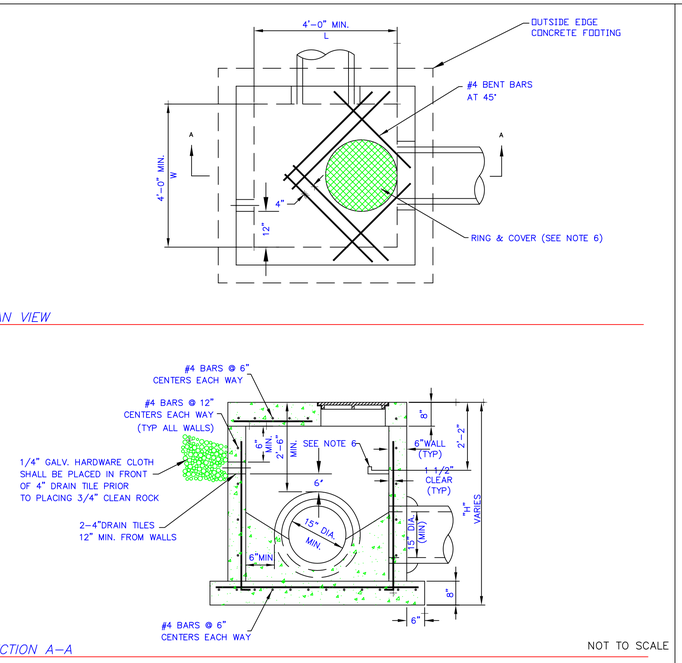

4 STANDARD PRECAST JUNCTION BOX

1. Standard drawings shall apply only to structures within the following limits:
   A. Inside plan dimensions shall not exceed 40 square feet.
   B. Wall height shall not exceed 10 vertical feet.
   Structures which exceed these limits shall be considered non-standard and must be designed and detailed by a licensed professional engineer.
2. All work and materials shall conform to Section 2600 of the Kansas City Metropolitan chapter of the American Public Works Association (KCAPWA).
3. Steps are required in all structures with wall height greater than 4 feet. Steps shall be Clay & Bailey 2102, MA Industries PS2-PF or approved equal.
4. Frames, lids, castings, steps, invert, subsurface drains, pipe connections and other items shown shall be considered subsidiary to each standard structure.
5. Subsurface drains are required in all structures in the public right-of-way with wall height greater than 3 feet. One drain per wall shall be installed only in walls which are perpendicular to the street centerline.
6. Ring and Cover for all curb inlets and field inlets shall be Neenah R-1537, Clay & Bailey #2020, Deeter #2016 or approved equal. Ring and Cover for junction boxes shall be Neenah R-1736, Clay & Bailey #2008, Deeter #1315 or approved equal.
7. Reinforcing bars shall be deformed, grade 60 and shall meet ASTM A 615 specifications.
8. Welded wire fabric shall meet ASTM A 185 specifications.
9. Placement of reinforcement shall comply with ACI 318, including embedment, lap lengths, bar supports and minimum concrete cover.
10. All precast and cast-in-place concrete shall conform to MCIB Specification Section 4 entitled "Materials", except that total shale, coal, and lignite content shall not exceed 0.5 percent by weight, and clay content shall be zero. Concrete mix shall conform to MCIB Specification Section 5 entitled "Concrete Mix Design Tables", and the compressive strength of each mixture shall be as designated therein.
11. Ready-mix concrete shall comply with ASTM C 94 specifications.
12. Floor of all structures shall be shaped with invert to provide smooth flow.
13. Transport, placement and curing of concrete shall comply with ACI 318, including hot weather and cold weather protection.
14. Bevel all exposed edges with ¾" chamfer or ½" tooled edge.
15. All reinforced concrete shall be mechanically vibrated during placement. Proper methods shall be applied to avoid aggregate segregation.
16. Joints between structure sections shall be made with plastic joint compound or as specified in Section 2602 of the KCAPWA.
17. All exposed concrete shall have a light broom finish.
18. Where sidewalks must adjoin storm sewer structures, #4 dowels shall be placed at 18" O.C. through ½" premolded expansion joints. Dowels shall be 18" long with 6" greased ends in the structure top.
19. Curb inlet dimensions shall be stated as 'length' x 'width' on all construction notes.
20. The minimum length of curb inlet opening shall be 4 feet.
21. Curb inlet frame top channel shall be fabricated from 0.15 max. carbon, forming quality, or A36 hot rolled steel plate.
22. All flat plate and rods shall be M1020 merchant quality or A36 hot rolled steel.
23. All curb inlet frame materials shall be free from rust and mill scale.
24. All welding shall conform to the provisions of the AWS "Structural Welding Code."
25. Curb inlet frames shall be hot-dip galvanized after fabrication per ASTM A 123.
26. Curb inlet frames shall be sloped to match the street centerline grade.
27. Pipe for storm sewer shall be either reinforced concrete or corrugated steel and shall meet KDOT standard specifications for "Cross Road" use.
28. Granular embedment for pipe shall meet CA-5 or CM-7 gradation requirement, and shall be cleaned crushed rock or cleaned crushed concrete.
29. Corrugated steel pipe gage shall comply with the table below.
30. All backfill under existing or proposed pavement shall be flowable fill.

MINIMUM CORRUGATED STEEL PIPE GAGE

PIPE DIAMETER	2-2/3" X 1/2"	3" X 1"	PIPE ARCH SPAN & RISE	PIPE AREA SQUARE FEET	2-2/3" X 1/2"	3" X 1"
12"	16		17" x 13"	1.1	16	
15"	16		21" x 15"	1.6	16	
18"	16		24" x 18"	2.2	16	
21"	16		28" x 20"	2.8	14	
24"	14		35" x 24"	4.4	14	
30"	14		42" x 29"	6.4	14	
36"	14	14	49" x 33"	8.7	12	
42"	12	14	57" x 38"	11.4	12	
48"	12	14	60" x 46"	15.6		14
54"	12	14	66" x 51"	19.3		14
60"	10	14	73" x 56"	23.2		12
66"	10	14	81" x 59"	27.4		12
72"	10	14	87" x 63"	32.1		12
78"	8	14	96" x 67"	37.0		12
84"	6	14	103" x 71"	42.4		12
90"		12	112" x 75"	48.0		12
96"		12	117" x 79"	54.2		10
102"		12	128" x 83"	60.5		10
108"		10	137" x 87"	67.4		10
114"		10	142" x 91"	74.5		10
120"		10				

5 GENERAL NOTES

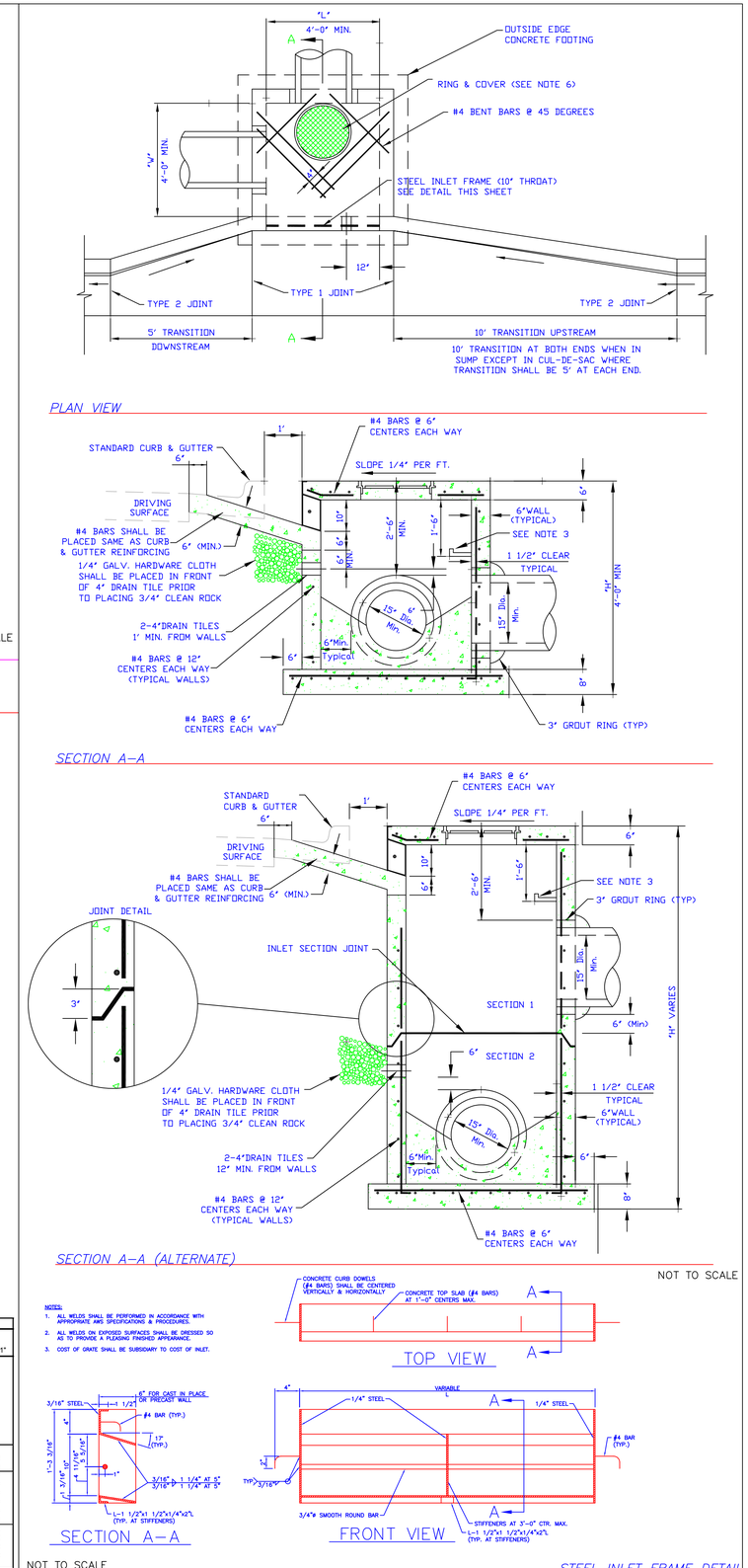

6 STANDARD PRECAST CURB INLET

City of De Soto
"BUILDING ON SMALL TOWN VALUES"
WWW.DESOTOKS.US
32905 West 84th Street
De Soto, Kansas 66018
TEL (913) 583-1182 FAX (913) 583-3123

PUBLIC IMPROVEMENT STANDARD DETAILS

STORM SEWERS

SHEET NUMBER

ST - 01

PROFESSIONAL ENGINEER

REV.	COMMENTS	BY

SHEET REFERENCE

DIGITAL I.D.: SS-DETAILS

PROJECT NO.: _____

ADOPTED DATE: 9/04/07

SHEET NO. ____ OF ____ SHEETS